Q.2 **During a sale, 44% of the goods are sold at a profit of 28%, 25% of the remaining goods are sold at a profit of 48%, and the rest are sold at a loss of 13%. All items have the same cost price. If there is an overall profit of x%, then what is the value of x?**

Ans

✗ A. 19.29

✗ B. 15.38

✗ C. 20.29

✓ D. 13.58

Question ID : **441009547580**
Option 1 ID : **4410092145717**
Option 2 ID : **4410092145719**
Option 3 ID : **4410092145718**
Option 4 ID : **4410092145716**
Status : **Answered**
Chosen Option : **A**

Q.3 A scooter travelling at two – third of its actual speed covers 6(

Ans

✗ A. 80 km/hr

✗ B. 75 km/hr

✓ C. 90 km/hr

✗ D. 96 km/hr

Question ID : **441009543938**
Option 1 ID : **4410092131151**
Option 2 ID : **4410092131150**
Option 3 ID : **4410092131148**
Option 4 ID : **4410092131149**
Status : **Answered**
Chosen Option : **A**

Q.4 X varies inversely as Y and Y varies inversely as Z. In a parti

Ans

✗ A. 15

✓ B. 16

✗ C. 19

✗ D. 17

Question ID : **441009898099**
Option 1 ID : **4410093546467**
Option 2 ID : **4410093546466**
Option 3 ID : **4410093546469**
Option 4 ID : **4410093546468**
Status : **Answered**
Chosen Option : **B**

Q.5 **The sum of two numbers is 49, and their LCM is 70. The two numbers are:**

Ans
- ✗ A. 19, 30
- ✓ B. 14, 35
- ✗ C. 12, 37
- ✗ D. 7, 42

Question ID : **441009525513**
Option 1 ID : **4410092057473**
Option 2 ID : **4410092057471**
Option 3 ID : **4410092057472**
Option 4 ID : **4410092057474**
Status : **Answered**
Chosen Option : **B**

Q.6 **The LCM of the numbers 18, 78 and 49 is:**

Ans
- ✓ A. 11466
- ✗ B. 11526
- ✗ C. 11486
- ✗ D. 11506

Question ID : **441009525651**
Option 1 ID : **4410092058023**
Option 2 ID : **4410092058024**
Option 3 ID : **4410092058025**
Option 4 ID : **4410092058026**
Status : **Answered**
Chosen Option : **C**

Q.7 **A class of 75 students took a Physics test. 22 students had an average score of 90. The other students had an average score of 70. What is the average score (rounded off to one decimal place) of the whole class?**

Ans
- ✗ A. 73.6
- ✓ B. 75.9
- ✗ C. 83.1
- ✗ D. 72.3

Question ID : **441009539529**
Option 1 ID : **4410092113514**
Option 2 ID : **4410092113512**
Option 3 ID : **4410092113513**
Option 4 ID : **4410092113515**
Status : **Answered**
Chosen Option : **B**

Q.8 **The ratio of the heights of a right circular cone and a right circular cylinder is 8 : 3, and the ratio of the radii of their bases is 9 : 2. If the volume of the cylinder is 792 cm^3, then the volume (in cm^3) of the cone is:**

Ans
- ✗ A. 14246
- ✓ B. 14256
- ✗ C. 14249
- ✗ D. 14257

Question ID : **441009600723**
Option 1 ID : **4410092358010**
Option 2 ID : **4410092358009**
Option 3 ID : **4410092358011**
Option 4 ID : **4410092358012**
Status : **Answered**
Chosen Option : **C**

Q.9 **The cost of a washing machine is 40% less than the cost of a TV. If the cost of the washing machine increases by 73% and that of the TV decreases by 67%, then what is the percentage change in the total cost of 5 washing machines and 2 TVs?**

Ans
- ✗ A. Decrease by 18%
- ✗ B. Decrease by 24%
- ✓ C. Increase by 17%
- ✗ D. Increase by 19%

Question ID : **441009560868**
Option 1 ID : **4410092198740**
Option 2 ID : **4410092198742**
Option 3 ID : **4410092198739**
Option 4 ID : **4410092198741**
Status : **Answered**
Chosen Option : **D**

Q.10 **During a Big Billion Day sale, a flagship mobile phone was available at a 20% discount on an e-commerce platform. Customers purchasing for the first time on the platform received an additional 10% cashback on the billing amount. Suraj, being a first-time user, purchased the mobile phone for ₹36,000. Find the original marked price (in ₹) of the mobile phone.**

Ans
- ✗ A. 49,500
- ✗ B. 45,000
- ✓ C. 50,000
- ✗ D. 48,500

Question ID : **441009545616**
Option 1 ID : **4410092137862**
Option 2 ID : **4410092137860**
Option 3 ID : **4410092137863**
Option 4 ID : **4410092137861**
Status : **Answered**
Chosen Option : **A**

Q.11 **Mohan has two grandsons, Pramod and Ashish. 14-year-old Pramod gets some money from Mohan's wealth, and 15-year-old Ashish gets the rest of the money. But Pramod and Ashish will get the money only when they turn 23 years old. Till then, the money is in a bank getting interest at the rate of 8% per annum, compounded annually. When both turn 23, they receive the same amount. How much (in ₹) had Mohan given Ashish initially, if the total money with Mohan was ₹24,700?**

Ans
- ✗ A. 11,625
- ✓ B. 12,825
- ✗ C. 13,175
- ✗ D. 11,875

Question ID : **441009572920**
Option 1 ID : **4410092246803**
Option 2 ID : **4410092246800**
Option 3 ID : **4410092246802**
Option 4 ID : **4410092246801**
Status : **Answered**
Chosen Option : **B**

Q.12 **Sujit is three times as old as his son, and his daughter is 3 years younger than the son. If the sum of the ages of these three people 3 years ago was 63 years, then Sujit's present age (in years) is:**

Ans
- ✗ A. 85
- ✓ B. 45
- ✗ C. 36
- ✗ D. 54

Question ID : **4410091220276**
Option 1 ID : **4410094814528**
Option 2 ID : **4410094814527**
Option 3 ID : **4410094814529**
Option 4 ID : **4410094814530**
Status : **Answered**
Chosen Option : **C**

Section : **Reasoning**

Q.1 **Each of the digits in the number 5976248 is arranged in descending order from left to right. The positions of how many digits will remain unchanged as compared to those in the original number?**

Ans
- ✓ A. Three
- ✗ B. One
- ✗ C. None
- ✗ D. Two

Question ID : **441009585670**
Option 1 ID : **4410092297809**
Option 2 ID : **4410092297807**
Option 3 ID : **4410092297806**
Option 4 ID : **4410092297808**
Status : **Answered**
Chosen Option : **D**

Q.2 **What should come in place of ? in the given series based on the English alphabetical order?**

DZD HWI LTN PQS ?

Ans

✗ A. HGT

✗ B. DFR

✓ C. TNX

✗ D. BGF

Question ID : **4410091449739**
Option 1 ID : **4410095727437**
Option 2 ID : **4410095727438**
Option 3 ID : **4410095727439**
Option 4 ID : **4410095727436**
Status : **Answered**
Chosen Option : **C**

Q.3 **In a certain code language, 'SONG' is coded as '6423' and 'ONES' is coded as '2648'. How is 'E' coded in that language?**

Ans

✗ A. 2

✗ B. 6

✗ C. 4

✓ D. 8

Question ID : **441009149615**
Option 1 ID : **441009594194**
Option 2 ID : **441009594195**
Option 3 ID : **441009594196**
Option 4 ID : **441009594197**
Status : **Answered**
Chosen Option : **D**

Q.4 **Seven boxes, Q, R, S, T, G, H and I, are kept one over the other, but not necessarily in the same order.**
Only H is kept above I. Only T is kept between S and Q. Only G is kept below S.
How many boxes are kept between R and G?

Ans

✗ A. One

✗ B. Two

✗ C. None

✓ D. Three

Question ID : **441009149599**
Option 1 ID : **441009594135**
Option 2 ID : **441009594136**
Option 3 ID : **441009594134**
Option 4 ID : **441009594137**
Status : **Answered**
Chosen Option : **A**

Q.5 **Refer to the following letter and symbol series and answer the question that follows. Counting to be done from left to right only.**

(Left) N Z \ D J J G % W C U B F E Q \ G V # C S (Right)

How many such symbols are there each of which is immediately preceded by a letter and also immediately followed by a symbol?

Ans

✗ A. Three

✓ B. None

✗ C. Two

✗ D. One

Question ID : **441009789414**
Option 1 ID : **4410093111658**
Option 2 ID : **4410093111655**
Option 3 ID : **4410093111657**
Option 4 ID : **4410093111656**
Status : **Answered**
Chosen Option : **D**

Q.6 **Based on the English alphabetical order, three of the following four letter-cluster pairs are alike in a certain way and thus form a group. Which letter-cluster pair DOES NOT belong to that group?**
(Note: The odd one out is not based on the number of consonants/vowels or their position in the letter-cluster.)

Ans

✓ A. TU-WX

✗ B. CE-GI

✗ C. EG-IK

✗ D. JL-NP

Question ID : **441009782150**
Option 1 ID : **4410093082603**
Option 2 ID : **4410093082605**
Option 3 ID : **4410093082606**
Option 4 ID : **4410093082604**
Status : **Answered**
Chosen Option : **D**

Q.7 **Refer to the given letter series and answer the question that follows. Counting to be done from left to right only.**

(Left) Q C Y B H I N M K O P G D A W E D C T U I T (Right)

How many such consonants are there, each of which is immediately preceded by a vowel and also immediately followed by a vowel?

Ans
- ✗ A. Two
- ✗ B. More Than Two
- ✗ C. None
- ✓ D. One

Question ID : **441009797517**
Option 1 ID : **4410093144069**
Option 2 ID : **4410093144070**
Option 3 ID : **4410093144067**
Option 4 ID : **4410093144068**
Status : **Answered**
Chosen Option : **D**

Q.8 **LQ 22 is related to HN 5 in a certain way. In the same way, KR 19 is related to GO 2. To which of the following is GH 16 related, following the same logic?**

Ans
- ✓ A. CE -1
- ✗ B. CD -5
- ✗ C. BE -5
- ✗ D. BD -1

Question ID : **441009787163**
Option 1 ID : **4410093102652**
Option 2 ID : **4410093102654**
Option 3 ID : **4410093102653**
Option 4 ID : **4410093102651**
Status : **Answered**
Chosen Option : **B**

Q.9 **Based on the English alphabetical order, three of the following four letter-clusters are alike in a certain way and thus form a group. Which letter-cluster DOES NOT belong to that group?**
(Note: The odd one out is not based on the number of consonants/vowels or their position in the letter-cluster.)

Ans
- ✗ A. RXT
- ✗ B. NTP
- ✓ C. LRM
- ✗ D. PVR

Question ID : **441009774069**
Option 1 ID : **4410093050282**
Option 2 ID : **4410093050280**
Option 3 ID : **4410093050279**
Option 4 ID : **4410093050281**
Status : **Answered**
Chosen Option : **D**

Q.10 **Select the pair which follows the same pattern as that followed by the two sets of pairs given below. Both pairs follow the same pattern.**

QPI : PMJ
DTN : CQO

Ans
- ✗ A. RPI : QMI
- ✓ B. PMS : OJT
- ✗ C. MQE : LNE
- ✗ D. IMH : HII

Question ID : **441009777828**
Option 1 ID : **4410093065318**
Option 2 ID : **4410093065317**
Option 3 ID : **4410093065315**
Option 4 ID : **4410093065316**
Status : **Answered**
Chosen Option : **B**

Q.11 **Seven people F, G, H, I, V, W, and X are sitting in a straight line facing north. Only two people sit between G and W. Only X sits to the right of H. Only one person sits between W and H. I sits at some place to the right of F and at some place to the left of V. How many people sit between V and F?**

Ans
- ✓ A. Two
- ✗ B. One
- ✗ C. Four
- ✗ D. Three

Question ID : **441009787074**
Option 1 ID : **4410093102296**
Option 2 ID : **4410093102295**
Option 3 ID : **4410093102298**
Option 4 ID : **4410093102297**
Status : **Answered**
Chosen Option : **D**

Q.12 **Each vowel in the word MINDFUL is changed to the letter immediately following it in the English alphabetical order and each consonant is changed to the letter immediately preceding it in the English alphabetical order. How many vowels are there in the group of letters thus formed?**

Ans
- ✗ A. None
- ✗ B. Three
- ✓ C. One
- ✗ D. Two

Question ID : **441009798015**
Option 1 ID : **4410093146059**
Option 2 ID : **4410093146062**
Option 3 ID : **4410093146060**
Option 4 ID : **4410093146061**
Status : **Answered**
Chosen Option : **C**

Q.13 **What will come in place of the question mark (?) in the following equation, if '+' and '−' are interchanged and '×' and '÷' are interchanged?**

4 ÷ 2 + 6 × 3 − 4 = ? + 16

Ans
- ✗ A. 22
- ✗ B. 24
- ✗ C. 28
- ✓ D. 26

Question ID : **441009555516**
Option 1 ID : **4410092177378**
Option 2 ID : **4410092177379**
Option 3 ID : **4410092177381**
Option 4 ID : **4410092177380**
Status : **Answered**
Chosen Option : **D**

Section : **Question Based on Electronics Engineering**

Q.1 **The system has an impulse response defined by $h(t) = \sin(5t)$. Which of the following statements correctly describes the system?**

Ans
- ✗ A. System cannot be classified without the input signal.
- ✗ B. System is causal because h(t) is defined for all t.
- ✓ C. The system is non-causal because $h(t)$ is non-zero for t<0
- ✗ D. System is causal because h(t) is always bounded between -1 and 1.

Question ID : **4410091529046**
Option 1 ID : **4410096039298**
Option 2 ID : **4410096039295**
Option 3 ID : **4410096039296**
Option 4 ID : **4410096039297**
Status : **Answered**
Chosen Option : **C**

Q.2 **Which of the following statements is correct in the context of the superheterodyne (SHD) receiver?**

S1: **The intermediate frequency for FM radio in a SHD receiver is 455 kHz.**
S2: **The first section in a SHD receiver is frequency converter.**
S3: **The purpose of the RF section in a SHD receiver is to pick up the desired station.**

Ans
- ✗ A. S1 and S3 only
- ✗ B. S1, S2 and S3
- ✗ C. S1 and S2 only
- ✓ D. S3 only

Question ID : **4410091375839**
Option 1 ID : **4410095434799**
Option 2 ID : **4410095434800**
Option 3 ID : **4410095434798**
Option 4 ID : **4410095434797**
Status : **Answered**
Chosen Option : **C**

Q.3 **The charge neutrality condition in a semiconductor states that:**

Ans

✗ A. The net density of negative charges is less than the net density of positive charges.

✓ B. The net density of negative charges is equal to the net density of positive charges.

✗ C. The net density of negative charges is greater than the net density of positive charges.

✗ D. The net density of negative charges is always equal to zero.

Question ID : **44100929887**
Option 1 ID : **441009119003**
Option 2 ID : **441009119001**
Option 3 ID : **441009119002**
Option 4 ID : **441009119004**
Status : **Answered**
Chosen Option : **C**

Q.4 **A unity-feedback system has open-loop transfer function:**

$$G(s)H(s) = \frac{K(s+1)}{s^2 + 4s + 13}$$

What is the angle of arrival (in degrees) of the root locus at the zero z = -1?

Ans

✗ A. 270°

✗ B. 90°

✗ C. 0°

✓ D. 180°

Question ID : **4410091454157**
Option 1 ID : **4410095744944**
Option 2 ID : **4410095744942**
Option 3 ID : **4410095744941**
Option 4 ID : **4410095744943**
Status : **Answered**
Chosen Option : **D**

Q.5 **Consider the two-port network shown. Port 1 is excited by V_1 = 2∠30° V and Port 2 is short-circuited (V_2=0). Determine the input current I_1 and the output current I_2.**

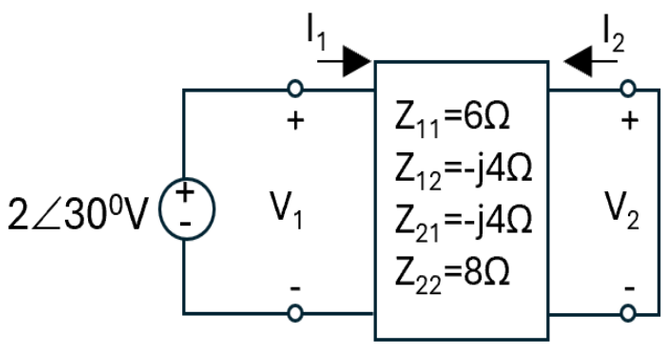

Ans

✗ A. I_1 = 0.25∠(−30°) A, I_2 = 0.125∠60° A

✓ B. I_1 = 0.25∠30° A, I_2 = 0.125∠120° A

✗ C. I_1 = 0.333∠30° A, I_2 = 0

✗ D. I_1 = 0.25∠30° A, I_2 = 0.125∠(−60°) A

Question ID : **4410091287476**
Option 1 ID : **4410095081694**
Option 2 ID : **4410095081691**
Option 3 ID : **4410095081692**
Option 4 ID : **4410095081693**
Status : **Answered**
Chosen Option : **A**

Q.6 **A series R–L–C circuit is excited by a sinusoidal source with frequency ω below its resonant frequency ω_0. What is the nature of the circuit and the phase relationship between the supply voltage and the current?**

Ans

✗ A. Inductive circuit; current lags the voltage

✓ B. Capacitive circuit; current leads the voltage

✗ C. Purely resistive circuit; current is in phase with the voltage

✗ D. Inductive circuit; current leads the voltage

Question ID : **4410091497633**
Option 1 ID : **4410095915556**
Option 2 ID : **4410095915557**
Option 3 ID : **4410095915558**
Option 4 ID : **4410095915559**
Status : **Answered**
Chosen Option : **C**

Q.7 **A silicon photodiode has a responsivity of 0.6 A/W at a certain wavelength. If the incident optical power is 2 milliwatts, then what is the photocurrent generated?**

Ans
- ✗ A. 0.6 μA
- ✓ B. 1.2 mA
- ✗ C. 3.2 mA
- ✗ D. 1.2 μA

Question ID : **4410091369258**
Option 1 ID : **4410095408486**
Option 2 ID : **4410095408488**
Option 3 ID : **4410095408489**
Option 4 ID : **4410095408487**
Status : **Answered**
Chosen Option : **D**

Q.8 **If a first-order low-pass active filter has a cut-off frequency of 2 KHz and a passband gain of 20, the gain (approximately) at frequency 2 KHz is _____.**

Ans
- ✗ A. 28
- ✗ B. 20
- ✓ C. 14
- ✗ D. 2

Question ID : **4410091367322**
Option 1 ID : **4410095400741**
Option 2 ID : **4410095400739**
Option 3 ID : **4410095400740**
Option 4 ID : **4410095400742**
Status : **Answered**
Chosen Option : **D**

Q.9 **Match the following columns with reference to various regions of operation of the MOS capacitor with p-substrate.**

Regions of operation	Condition or validity
I- Accumulation II- Depletion III- Inversion	A- Gate voltage much greater than threshold voltage B- Gate voltage less than zero C- Gate voltage greater than zero but less than threshold voltage

Ans
- ✗ A. I-A II- B III- C
- ✗ B. I-A II- C III- B
- ✗ C. I-C II- B III- A
- ✓ D. I-B II- C III- A

Question ID : **4410091369218**
Option 1 ID : **4410095408329**
Option 2 ID : **4410095408326**
Option 3 ID : **4410095408328**
Option 4 ID : **4410095408327**
Status : **Answered**
Chosen Option : **C**

Q.10 **A PAL can implement functions in sum-of-products form. For the Boolean function:F(A,B,C,D)=Σm(0,1,2,4,5,6,8,9,10,12,13,14)**
What is the minimum number of product terms required to implement F using a PAL, after Karnaugh map minimization?

Ans
- ✗ A. 4
- ✗ B. 1
- ✓ C. 2
- ✗ D. 3

Question ID : **4410091521391**
Option 1 ID : **4410096008675**
Option 2 ID : **4410096008672**
Option 3 ID : **4410096008673**
Option 4 ID : **4410096008674**
Status : **Answered**
Chosen Option : **D**

Q.11 **Which of the given statements is/are correct in the context of a direct coupling in a multistage amplifier?**

S1: **Direct coupling is suited for amplifying AC signals with frequencies as a fraction of hertz.**
S2: **It can amplify direct current as a DC amplifier.**
S3: **Q point of the BJT in a direct coupling multistage amplifier is not affected by the temperature variation.**

Ans
- ✗ A. S1, S2 and S3
- ✗ B. S1 and S3 only
- ✓ C. S1 and S2 only
- ✗ D. S2 and S3 only

Question ID : **4410091371691**
Option 1 ID : **4410095418163**
Option 2 ID : **4410095418162**
Option 3 ID : **4410095418160**
Option 4 ID : **4410095418161**
Status : **Answered**
Chosen Option : **D**

Q.12 Which of the following statements is correct in the context of the AM envelope detector circuit?

S1: It is suitable only if the modulation index is > 1.
S2: It works only if the carrier is present.
S3: It is a type of synchronous detector.

Ans

✗ A. Only S2 and S3

✗ B. Only S1 and S3

✓ C. Only S2

✗ D. S1 and S2 only

Question ID : **4410091372212**
Option 1 ID : **4410095420264**
Option 2 ID : **4410095420263**
Option 3 ID : **4410095420262**
Option 4 ID : **4410095420265**
Status : **Answered**
Chosen Option : **B**

Q.13 What is the typical current profile of a TTL output driver when switching from low to high?

Ans

✓ A. Current spikes up as the output switches and then gradually decreases.

✗ B. No current is drawn during the transition.

✗ C. Current remains constant throughout the transition.

✗ D. The current first decreases, then increases.

Question ID : **44100997293**
Option 1 ID : **441009387175**
Option 2 ID : **441009387177**
Option 3 ID : **441009387176**
Option 4 ID : **441009387178**
Status : **Answered**
Chosen Option : **A**

Q.14 For a certain sequence detector, the designer uses a Mealy FSM instead of a Moore FSM. What is the most likely reason for this choice?

Ans

✓ A. The detector requires faster output response upon input pattern recognition.

✗ B. The detector needs to minimise power.

✗ C. Moore FSMs cannot detect input sequences.

✗ D. The machine produce output only after the entire sequence is detected.

Question ID : **4410091521103**
Option 1 ID : **4410096007595**
Option 2 ID : **4410096007594**
Option 3 ID : **4410096007597**
Option 4 ID : **4410096007596**
Status : **Answered**
Chosen Option : **A**

Q.15 **Which of the following options is correct for a modulated signal $s(t) = e^{-at} \cos [(w_c + \Delta w) t] u(t)$, where a, w_c and Δ w are non-negative constant? Assume $w_c >> \Delta$.**

Ans

✗ A. Complex envelope of S(t) is eat u(t) e-j∆wt

✓ B. Complex envelope of S(t) is e-at u(t) ej∆wt

✗ C. Complex envelope of S(t) is e-at u(t) e-j∆wt

✗ D. Complex envelope of S(t) is eat u(t) ej∆wt

Question ID : **4410091379408**
Option 1 ID : **4410095449053**
Option 2 ID : **4410095449050**
Option 3 ID : **4410095449052**
Option 4 ID : **4410095449051**
Status : **Answered**
Chosen Option : **A**

Q.16 **At absolute zero temperature (0 K), an intrinsic semiconductor behaves as a/an _____ and has ideally _____.**

Ans

✓ A. Insulator, infinite resistivity

✗ B. Conductor, infinite resistivity

✗ C. Conductor, zero resistivity

✗ D. Insulator, zero resistivity

Question ID : **4410091506604**
Option 1 ID : **4410095950774**
Option 2 ID : **4410095950773**
Option 3 ID : **4410095950771**
Option 4 ID : **4410095950772**
Status : **Answered**
Chosen Option : **C**

Q.17 **A digital filter is required to satisfy the following specifications:**
a) Exactly linear phase
b) Sharp transition band
c) Stable response even if coefficient quantization occurs
Which of the given filter architecture is the most appropriate?

Ans

✗ A. Direct-form IIR Chebyshev Type-I filter

✓ B. Long-length optimal equiripple FIR filter

✗ C. Long-length FIR filter using rectangular window

✗ D. Cascade-form IIR elliptic filter

Question ID : **4410091525681**
Option 1 ID : **4410096025891**
Option 2 ID : **4410096025892**
Option 3 ID : **4410096025890**
Option 4 ID : **4410096025893**
Status : **Answered**
Chosen Option : **A**

Q.18 **If a continuous-time signal x(t) has non-zero continuous spectrum only for $f \leq 3$ kHz what happens if it is sampled at f_s = 5 kHz?**

Ans

✗ A. Oversampling

✗ B. Perfect reconstruction of the signal

✓ C. Undersampling and aliasing

✗ D. Time scaling

Question ID : **4410091408437**
Option 1 ID : **4410095562710**
Option 2 ID : **4410095562709**
Option 3 ID : **4410095562712**
Option 4 ID : **4410095562711**
Status : **Answered**
Chosen Option : **C**

Q.19 **Which of the following is the key characteristic of a Field-Programmable Gate Array (FPGA) that distinguishes it from a Complex Programmable Logic Device (CPLD) in terms of architecture?**

Ans

✗ A. FPGAs are primarily used for implementing simple, fast logic, while CPLDs are used for complex, multi-core designs.

✗ B. FPGAs typically have a coarse-grained, logic-block based architecture, while CPLDs have a fine-grained, array-based architecture.

✓ C. FPGAs use a hierarchy of configurable logic blocks and programmable routing, whereas CPLDs use a single, large programmable AND-OR plane.

✗ D. FPGAs use an array of interconnected macrocells, while CPLDs use Look-Up Tables (LUTs).

Question ID : **4410091265947**
Option 1 ID : **4410094996668**
Option 2 ID : **4410094996667**
Option 3 ID : **4410094996669**
Option 4 ID : **4410094996666**
Status : **Answered**
Chosen Option : **C**

Q.20 **A solid sphere of radius R has a volume charge density given by:**

$$\rho_v(r) = \rho_0\left(1 - \frac{r}{R}\right), \quad 0 \leq r \leq R,$$

where r is the distance from the center. What is the total charge Q of the sphere?

Ans

✗ A. $(\pi / 6)\, \rho_0 R^3$

✗ B. $(\pi / 2)\, \rho_0 R^3$

✗ C. $(\pi / 12)\, \rho_0 R^3$

✓ D. $(\pi / 3)\, \rho_0 R^3$

Question ID : **4410091455448**
Option 1 ID : **4410095750092**
Option 2 ID : **4410095750094**
Option 3 ID : **4410095750091**
Option 4 ID : **4410095750093**
Status : **Answered**
Chosen Option : **B**

Q.21 **Two perfect dielectric media are separated by a charge-free planar boundary. Their relative permittivities are:**
$\varepsilon_{r1} = 6$, $\varepsilon_{r2} = 2$.
In medium 1, the electric field at a point P has magnitude $E_1 = 100$ V/m and makes an angle $\alpha_1 = 60°$ with the normal to the boundary. Under electrostatic conditions, the angle α_2 in medium 2 and the magnitude E_2 are _____.

Ans
- ✗ A. α2= 45°, | E2| = 100√3 V/m
- ✗ B. α2= 45°, | E2| = 100/3 V/m
- ✓ C. α2 = 30°, |E2| = 100√3 V/m
- ✗ D. α2= 30°, | E2| = 100/3 V/m

Question ID : **4410091525028**
Option 1 ID : **4410096023313**
Option 2 ID : **4410096023314**
Option 3 ID : **4410096023311**
Option 4 ID : **4410096023312**
Status : **Answered**
Chosen Option : **B**

Q.22 **If $x_1[n] \leftrightarrow X_1(z)$ and $x_2[n] \leftrightarrow X_2(z)$, then for $y[n] = 3x_1[n] - 2x_2[n]$, the Z-transform is:**

Ans
- ✗ A. Y(z) = X1(z) · X2(z)
- ✓ B. Y(z) = 3X1(z) − 2X2(z)
- ✗ C. Y(z) = X1(z) + X2(z)
- ✗ D. Y(z) = 3X1(z) · X2(z)

Question ID : **4410091287552**
Option 1 ID : **4410095081996**
Option 2 ID : **4410095081995**
Option 3 ID : **4410095081997**
Option 4 ID : **4410095081998**
Status : **Answered**
Chosen Option : **B**

Q.23 **A single-stage common-emitter amplifier is modelled with h-parameters, $h_{ie} = 1000\ \Omega$, $h_{fe} = 50$, and h_{re} is negligible. The collector resistor is $R_c = 4.7\ K\Omega$ and the amplifier drives a load $R_L = 10\ K\Omega$ connected at the collector (i.e., collector sees in parallel with R_L). Neglect h_{oe} effects. The approximate midband voltage gain $A_v = \frac{v_0}{v_i}$ is:**

Ans
- ✓ A. -160
- ✗ B. -200
- ✗ C. -80
- ✗ D. -120

Question ID : **4410091268877**
Option 1 ID : **4410095008025**
Option 2 ID : **4410095008027**
Option 3 ID : **4410095008024**
Option 4 ID : **4410095008026**
Status : **Answered**
Chosen Option : **D**

Q.24 In weakly stationary process, _____.

Ans

✗ A. mean value is dependent of the shift of time origin

✗ B. autocorrelation function dependent on the shift of time origin

✗ C. wide-sense stationary process and weakly stationary process are not same

✓ D. mean value is constant

Question ID : **4410091510031**
Option 1 ID : **4410095964800**
Option 2 ID : **4410095964802**
Option 3 ID : **4410095964803**
Option 4 ID : **4410095964801**
Status : **Answered**
Chosen Option : **B**

Q.25 The junction (transition) capacitance of the PN junction exists in _____ bias and it is _____ proportional to the width of the barrier.

Ans

✗ A. forward, inversely

✓ B. reverse, inversely

✗ C. forward, directly

✗ D. reverse, directly

Question ID : **4410091506530**
Option 1 ID : **4410095950476**
Option 2 ID : **4410095950477**
Option 3 ID : **4410095950475**
Option 4 ID : **4410095950478**
Status : **Answered**
Chosen Option : **B**

Q.26 A 12-bit ADC with a full-scale range of 0 to 4.095 V receives an analog input of 2.5V. What is the corresponding digital output code in decimal form?

Ans

✗ A. 1250

✗ B. 3000

✓ C. 2500

✗ D. 2000

Question ID : **4410091520936**
Option 1 ID : **4410096006952**
Option 2 ID : **4410096006953**
Option 3 ID : **4410096006951**
Option 4 ID : **4410096006950**
Status : **Answered**
Chosen Option : **A**

Q.27 **Determine the wavelength of the light emitted by a LED if the frequency of operation for the LED is 400 THz.**

Ans

✗ A. 500 nm

✗ B. 600 nm

✗ C. 1000 nm

✓ D. 750 nm

Question ID : **44100929801**
Option 1 ID : **441009118664**
Option 2 ID : **441009118662**
Option 3 ID : **441009118663**
Option 4 ID : **441009118661**
Status : **Answered**
Chosen Option : **A**

Q.28 **The electric potential in a region is given by:**
$V(x, y, z) = 2x + 3y^2 - 4z$ volts.
At the point P(1, −1, 2), find the electric field vector $\mathbf{E}(P)$ in unit vector form (a_x, a_y, a_z).

Ans

✗ A. $-2\,a_x - 6\,ay + 4\,az$ V/m

✓ B. $-2\,a_x + 6\,ay + 4\,az$ V/m

✗ C. $-2\,a_x + 6\,ay - 4\,az$ V/m

✗ D. $+2\,a_x - 6\,ay - 4\,az$ V/m

Question ID : **4410091455476**
Option 1 ID : **4410095750211**
Option 2 ID : **4410095750212**
Option 3 ID : **4410095750214**
Option 4 ID : **4410095750213**
Status : **Answered**
Chosen Option : **A**

Q.29 **What is the result of a 4-bit ring counter which performs left shifting the 4-bit number 0100 three times to the left?**

Ans

✓ A. 0010

✗ B. 0100

✗ C. 1000

✗ D. 0001

Question ID : **4410091521427**
Option 1 ID : **4410096008812**
Option 2 ID : **4410096008815**
Option 3 ID : **4410096008814**
Option 4 ID : **4410096008813**
Status : **Answered**
Chosen Option : **B**

Q.30 **An anti-causal discrete time system has the system function as**

$$H(z) = \frac{2}{(1 - 0.4z^{-1})(1 - 1.1z^{-1})}$$. **The system is _____.**

Ans

✔ A. unstable because ROC does not include the unit circle

✘ B. stable because ROC is inside the smallest magnitude pole

✘ C. always stable because ROC: |z| > 0.4

✘ D. always unstable because ROC: |z| > 1.1

Question ID : **4410091529034**
Option 1 ID : **4410096039249**
Option 2 ID : **4410096039250**
Option 3 ID : **4410096039247**
Option 4 ID : **4410096039248**
Status : **Answered**
Chosen Option : **C**

Q.31 **In unsigned multiplication of two 6-bit numbers, what is the maximum bit-length of the output?**

Ans

✘ A. 7

✘ B. 11

✘ C. 6

✔ D. 12

Question ID : **4410091521378**
Option 1 ID : **4410096008621**
Option 2 ID : **4410096008622**
Option 3 ID : **4410096008620**
Option 4 ID : **4410096008623**
Status : **Answered**
Chosen Option : **D**

Q.32 **In a region of space, the magnetic field intensity is given by:**
H (x, y, z) = y a_x − x a_y
Find the total current I flowing through the square surface in the xy-plane bounded by x = 0, x = 1, y = 0, and y = 1.
Assume the standard orientation: surface normal $a_n = a_z$
(counter-clockwise boundary when viewed from +z).

Ans

✘ A. −1 A

✔ B. −2 A

✘ C. +2 A

✘ D. 0 A

Question ID : **4410091455528**
Option 1 ID : **4410095750429**
Option 2 ID : **4410095750430**
Option 3 ID : **4410095750428**
Option 4 ID : **4410095750427**
Status : **Answered**
Chosen Option : **D**

Q.33 **A medium has**
$\varepsilon_r = 60$, $\mu_r = 1$, $\sigma = 3$ S/m.
Let f_c be the frequency at which the conduction current density equals the displacement current density, i.e. $J_c = J_d$. Using the rule of ten, where the higher frequency is 10 times f_c and the lower frequency is f_c / 10, estimate the frequency ranges in which the medium behaves as a good conductor and as a good dielectric.

Ans
- ✗ A. Good conductor: f ≲ 1 MHz; Good dielectric: f ≳ 100 MHz
- ✗ B. Good conductor: f ≲ 9 MHz; Good dielectric: f ≳ 900 MHz
- ✗ C. Good conductor: f ≲ 900 MHz; Good dielectric: f ≳ 90 GHz
- ✓ D. Good conductor: f ≲ 90 MHz; Good dielectric: f ≳ 9 GHz

Question ID : **4410091455695**
Option 1 ID : **4410095751106**
Option 2 ID : **4410095751105**
Option 3 ID : **4410095751104**
Option 4 ID : **4410095751103**
Status : **Answered**
Chosen Option : **A**

Q.34 **A transistor in common-emitter configuration is described by the small-signal h-parameters $h_{ie} = 1$ kΩ, $h_{fe} = 100$, $h_{re} \approx 0$, and $h_{oe} \approx 0$. A sinusoidal signal source of amplitude $v_s = 0.20$ V with source resistance $R_s = 1$ kΩ is connected between the base and emitter. Using the hybrid small-signal model based on these h-parameters, determine the amplitude of the small-signal collector current i_c. Select the correct option.**

Ans
- ✗ A. 20 mA
- ✓ B. 10 mA
- ✗ C. 50 mA
- ✗ D. 5 mA

Question ID : **4410091525816**
Option 1 ID : **4410096026416**
Option 2 ID : **4410096026415**
Option 3 ID : **4410096026417**
Option 4 ID : **4410096026414**
Status : **Answered**
Chosen Option : **A**

Q.35 **A slab of perfect dielectric ($\varepsilon_r = 2$) is adjacent to air. Inside the slab, the normal electric field is sinusoidal: $E_d(t) = E_0 \cos(\omega t)\, a_n$, with $E_0 = 300$ V/m. Assume $\mu_r = 1$, no free surface charge at the interface, and the field is normal to the surface. Which option correctly gives the amplitudes of the displacement current density J_d in the dielectric and in air, respectively?**

Ans

✗ A. Both are zero

✗ B. Air value is twice the dielectric value

✓ C. Equal and non-zero (same value in both media)

✗ D. Dielectric value is twice the air value

Question ID : **4410091455626**
Option 1 ID : **4410095750826**
Option 2 ID : **4410095750825**
Option 3 ID : **4410095750823**
Option 4 ID : **4410095750824**
Status : **Answered**
Chosen Option : **A**

Q.36 **An AWGN channel operating at a large signal to noise ratio (SNR>>1) and bandwidth F has capacity C. If the signal to noise is quadrupled keeping F constant, then the resulting capacity of the channel C1 is _____.**

Ans

✗ A. C1 = 4C

✓ B. C1 = C+2F

✗ C. C1 = C+F

✗ D. C1 = 2C

Question ID : **4410091375850**
Option 1 ID : **4410095434843**
Option 2 ID : **4410095434841**
Option 3 ID : **4410095434842**
Option 4 ID : **4410095434844**
Status : **Answered**
Chosen Option : **B**

Q.37 **The corresponding minterm Boolean expression for 4-variable inputs A, B, C, and D, using the minterms m_3, m_4, and m_7, is _____.**

Ans

✗ A. $Y = \bar{A}\,\bar{B}\,\bar{C}\,D + \bar{A}\,\bar{B}\,\bar{C}\,\bar{D} + \bar{A}\,B\,C\,D$

✓ B. $Y = \bar{A}\,\bar{B}\,C\,D + \bar{A}\,B\,\bar{C}\,\bar{D} + \bar{A}\,B\,C\,D$

✗ C. $Y = A\bar{B}\,C\,D + \bar{A}\,B\,\bar{C}\,\bar{D} + \bar{A}\,B\,C\,D$

✗ D. $Y = \bar{A}\,\bar{B}\,C\,\bar{D} + \bar{A}\,B\,C\,\bar{D} + \bar{A}\,\bar{B}\,C\,\bar{D}$

Question ID : **4410091533080**
Option 1 ID : **4410096055279**
Option 2 ID : **4410096055278**
Option 3 ID : **4410096055280**
Option 4 ID : **4410096055281**
Status : **Answered**
Chosen Option : **C**

Q.38 In a synchronous binary counter, what is the primary characteristic that distinguishes it from an asynchronous counter?

Ans

✗ A. The ability to count in decimal.

✓ B. All flip-flops are clocked simultaneously.

✗ C. The use of fewer flip-flops.

✗ D. Lower power consumption.

Question ID : **44100997357**
Option 1 ID : **441009387436**
Option 2 ID : **441009387437**
Option 3 ID : **441009387435**
Option 4 ID : **441009387438**
Status : **Answered**
Chosen Option : **B**

Q.39 The system is described by the equation, y(t) = x(t) + 3 x(t - 1). The system is _____.

Ans

✓ A. Causal and stable

✗ B. Causal but unstable

✗ C. Non-causal but stable

✗ D. Unsable and non-causal

Question ID : **4410091401048**
Option 1 ID : **4410095533739**
Option 2 ID : **4410095533740**
Option 3 ID : **4410095533737**
Option 4 ID : **4410095533738**
Status : **Answered**
Chosen Option : **A**

Q.40 Which of the following statements is/are correct in the context of the encoding in a PCM system?

S1: A signal sampled at 8kHz in to 256 quantisation levels is encoded with 8 bits/sample.
S2: The basic function of an encoder in PCM is to convert quantised signal into a binary code sequence.
S3: The number of quantisation levels does not affect the encoding in a PCM system.

Ans

✗ A. S3 and S2 only

✗ B. S1 and S3 only

✗ C. S1, S2 and S3

✓ D. S1 and S2 only

Question ID : **4410091376288**
Option 1 ID : **4410095436714**
Option 2 ID : **4410095436713**
Option 3 ID : **4410095436715**
Option 4 ID : **4410095436712**
Status : **Answered**
Chosen Option : **A**

Q.41 **Choose the correct statement for the encoding in a Pulse Code Modulation system?**
S1: A signal sampled at 4kHz in to 32 quantization levels is encoded with 5 bits/sample.
S2: The basic function of an encoder is to convert quantized signal into a binary code sequence.
S3: The number of quantization levels does affect the encoding in Pulse Code Modulation system.

Ans
- ✗ A. S2 and S3 only
- ✗ B. S1 and S3 only
- ✓ C. S1, S2 and S3
- ✗ D. S1 and S2 only

Question ID : **4410091510129**
Option 1 ID : **4410095965051**
Option 2 ID : **4410095965050**
Option 3 ID : **4410095965048**
Option 4 ID : **4410095965049**
Status : **Answered**
Chosen Option : **C**

Q.42 **A semi-infinite transmission line supports only a forward-traveling wave.**
$V(z) = V^{+} e^{-\gamma z}$, $I(z) = (V^{+} / Z_0) e^{-\gamma z}$.
The line has $Z_0 = 25\ \Omega$ and propagation constant
$\gamma = \alpha + j\beta = \frac{\ln 2}{5} + j\frac{\pi}{15}$ per meter.
If the input voltage at z = 0 is V(0) = 50∠0° V, find the current at z = 5 m.

Ans
- ✗ A. 2∠0° A
- ✗ B. 1∠+60° A
- ✗ C. 2∠−60° A
- ✓ D. 1∠−60° A

Question ID : **4410091455793**
Option 1 ID : **4410095751510**
Option 2 ID : **4410095751509**
Option 3 ID : **4410095751507**
Option 4 ID : **4410095751508**
Status : **Answered**
Chosen Option : **C**

Q.43 The small signal equivalent of a Zener diode in reverse breakdown region is represented by _____.

Ans

✗ A. series combination of a DC current source and dynamic capacitance

✗ B. shunt combination of a DC current source and dynamic inductance

✗ C. shunt combination of a DC voltage source and dynamic inductance

✓ D. series combination of a DC voltage source and small dynamic resistance

Question ID : **4410091506539**
Option 1 ID : **4410095950512**
Option 2 ID : **4410095950511**
Option 3 ID : **4410095950513**
Option 4 ID : **4410095950514**
Status : **Answered**
Chosen Option : **A**

Q.44 A metal oxide semiconductor field effect transistor (MOSFET) is used in a self-biasing circuit with a drain resistor (R_D) and a source resistor (R_S). If the value R_S is increased, which of the following options is an immediate effect on the quiescent drain current (I_{DQ}) and the quiescent gate-source voltage (V_{GSQ})?

Ans

✓ A. IDQ decreases, and VGSQ becomes more negative.

✗ B. IDQ increases, and VGSQ increases.

✗ C. IDQ decreases, and VGSQ becomes more positive.

✗ D. IDQ increases, and VGSQ decreases.

Question ID : **4410091183763**
Option 1 ID : **4410094669131**
Option 2 ID : **4410094669129**
Option 3 ID : **4410094669132**
Option 4 ID : **4410094669130**
Status : **Answered**
Chosen Option : **C**

Q.45 For a fixed (analog) spectrum continuous time signal x(t), increasing the DFT frequency samples corresponds to _____ in the time domain.

Ans

✓ A. zero-padding

✗ B. circular time shift

✗ C. time-scaling

✗ D. signal compression

Question ID : **4410091525668**
Option 1 ID : **4410096025839**
Option 2 ID : **4410096025840**
Option 3 ID : **4410096025838**
Option 4 ID : **4410096025841**
Status : **Answered**
Chosen Option : **B**

Q.46 **An AC circuit has a voltage v(t) = 30 sin(ωt + 80°) V and a current i(t) = 10 sin(ωt + 50°) A. What are the apparent power (S) and reactive power (Q) of the circuit, respectively?**

Ans

✔ A. S = 150 VA, Q = 75 VAR

✘ B. S = 100 VA, Q = 50 VAR

✘ C. S = 150√2 VA, Q = 150 VAR

✘ D. S = 150 VA, Q = 75√3 VAR

Question ID : **4410091497644**
Option 1 ID : **4410095915602**
Option 2 ID : **4410095915603**
Option 3 ID : **4410095915600**
Option 4 ID : **4410095915601**
Status : **Answered**
Chosen Option : **B**

Q.47 **Choose the correct statement.**
S1: The intermediate frequency for AM radio in superheterodyne (SHD) receiver is 455 kHz.
S2: The first section in a superheterodyne (SHD) receiver is frequency converter.
S3: The purpose of RF section in a superheterodyne (SHD) receiver is to picks up the desired station.

Ans

✘ A. S1 and S2 only.

✘ B. S1, S2 and S3.

✘ C. S2 and S3 only.

✔ D. S1 and S3 only.

Question ID : **4410091510058**
Option 1 ID : **4410095964904**
Option 2 ID : **4410095964906**
Option 3 ID : **4410095964907**
Option 4 ID : **4410095964905**
Status : **Answered**
Chosen Option : **C**

Q.48 **A load resistor R_L is to be connected across a–b in the given circuit. For maximum power transfer to R_L, find the value of R_L and the maximum power delivered to it.**

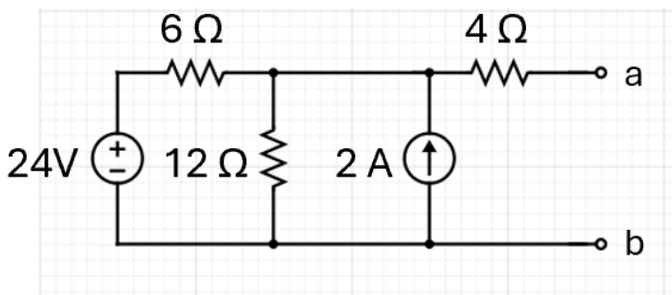

Ans

✗ A. R_l = 8 Ω, P_{max} = 12 W

✓ B. R_l = 8 Ω, P_{max} = 18 W

✗ C. R_l = 6 Ω, P_{max} = 24 W

✗ D. R_l = 4 Ω, P_{max} = 36 W

Question ID : **4410091497985**
Option 1 ID : **4410095917007**
Option 2 ID : **4410095917005**
Option 3 ID : **4410095917004**
Option 4 ID : **4410095917006**
Status : **Answered**
Chosen Option : **D**

Q.49 **Which of the given statements is/are correct in the context of a voltage-controlled oscillator?**

S1: It is an oscillator whose frequency can be changed by a variable DC voltage.
S2: Voltage-controlled oscillator can produce a non-sinusoidal output only.
S3: Voltage-controlled sawtooth oscillator cannot be designed using UJT.

Ans

✗ A. S1, S2 and S3

✗ B. Only S1 and S3

✗ C. Only S2 and S3

✓ D. Only S1

Question ID : **4410091367379**
Option 1 ID : **4410095400963**
Option 2 ID : **4410095400964**
Option 3 ID : **4410095400962**
Option 4 ID : **4410095400961**
Status : **Answered**
Chosen Option : **D**

Q.50 **A unity negative-feedback system has an open-loop transfer function:**

$$G(s) = \frac{K(s + z)}{s^2(s + a)}, \text{ where } K > 0.$$

It is given that the system is unstable for every K > 0. A pure derivative controller with transfer function Gc(s) = s is introduced in the forward path. Determine for which values of K the compensated system is stable. Assuming a, z > 0.

Ans

✗ A. K > 1/5

✗ B. 0 < K < 2

✓ C. K > 0

✗ D. The system cannot be stabilized by a D-only controller

Question ID : **4410091451095**
Option 1 ID : **4410095732848**
Option 2 ID : **4410095732849**
Option 3 ID : **4410095732850**
Option 4 ID : **4410095732851**
Status : **Answered**
Chosen Option : **B**

Q.51 **Let x(t) be a causal signal with Laplace transform X(s). What is the Laplace transform of integral of x(t)?**

Ans

✗ A. $(X(s) - x(0))/s^2$

✗ B. $X(s)/s^2$

✓ C. $X(s)/s$

✗ D. $(sX(s) - x(0))/s$

Question ID : **4410091524593**
Option 1 ID : **4410096021593**
Option 2 ID : **4410096021594**
Option 3 ID : **4410096021591**
Option 4 ID : **4410096021592**
Status : **Answered**
Chosen Option : **A**

Q.52 The transfer function of a network is given by $H(s) = \frac{(s}{(s +}$

Ans

✗ A. Z=2, P1=4, P2=6

✓ B. Z=−2, P1=−4, P2=−6

✗ C. Z=−6, P1=−4, P2=−2

✗ D. Z=−4, P1=−2, P2=−6

Question ID : **441009266714**
Option 1 ID : **4410091036237**
Option 2 ID : **4410091036236**
Option 3 ID : **4410091036239**
Option 4 ID : **4410091036238**
Status : **Answered**
Chosen Option : **A**

Q.53 Identify the correct statement related to a photodiode.

Ans

✗ A. The application of light to the junction will result in increased number of minority carriers and a decreased level of reverse current.

✗ B. The application of light to the junction will result in increased number of majority carriers and an increased level of reverse current.

✓ C. The application of light to the junction will result in increased number of minority carriers and an increased level of reverse current.

✗ D. The application of light to the junction will result in increased number of majority carriers and a decreased level of reverse current.

Question ID : **44100929857**
Option 1 ID : **441009118885**
Option 2 ID : **441009118888**
Option 3 ID : **441009118886**
Option 4 ID : **441009118887**
Status : **Answered**
Chosen Option : **A**

Q.54 Choose the INCORRECT statement for the practical diode model.

S1: Equivalent circuit of the practical diode in the forward bias state consist of static resistance only.
S2: Reverse current for the practical diode is zero.

Ans

✗ A. S1 only

✗ B. S2 only

✓ C. S1 and S2

✗ D. Neither S1 nor S2

Question ID : **4410091506859**
Option 1 ID : **4410095951807**
Option 2 ID : **4410095951808**
Option 3 ID : **4410095951806**
Option 4 ID : **4410095951809**
Status : **Answered**
Chosen Option : **B**

Q.55 Determine the Norton equivalent seen between terminals a and b. Select the correct pair of R_N, and i_N.

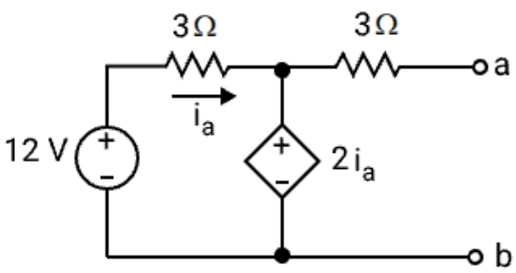

Ans

✔ A. RN = 3 Ω, iN = 1.6 A

✘ B. RN = 4 Ω, iN = +3 A

✘ C. RN = 4 Ω, iN = −3 A

✘ D. RN = 6 Ω, iN = −3 A

Question ID : **4410091525800**
Option 1 ID : **4410096026353**
Option 2 ID : **4410096026351**
Option 3 ID : **4410096026350**
Option 4 ID : **4410096026352**
Status : **Answered**
Chosen Option : **D**

Q.56 Choose the correct statement.
S1: The entropy for a fair binary variable with probabilities P (0) =P (1) =0.5 is 1 bit.
S2: If the entropy is computed with natural log (ln), the unit of entropy is bits.

Ans

✘ A. S1 and S2

✔ B. Only S1

✘ C. Neither S1 nor S2

✘ D. Only S2

Question ID : **4410091511960**
Option 1 ID : **4410095971924**
Option 2 ID : **4410095971921**
Option 3 ID : **4410095971923**
Option 4 ID : **4410095971922**
Status : **Answered**
Chosen Option : **A**

Q.57 **The figure shows the frequency response of a series R–L–C circuit. Curves are labeled 1 to 5. Which option correctly matches each label to the corresponding quantity?**

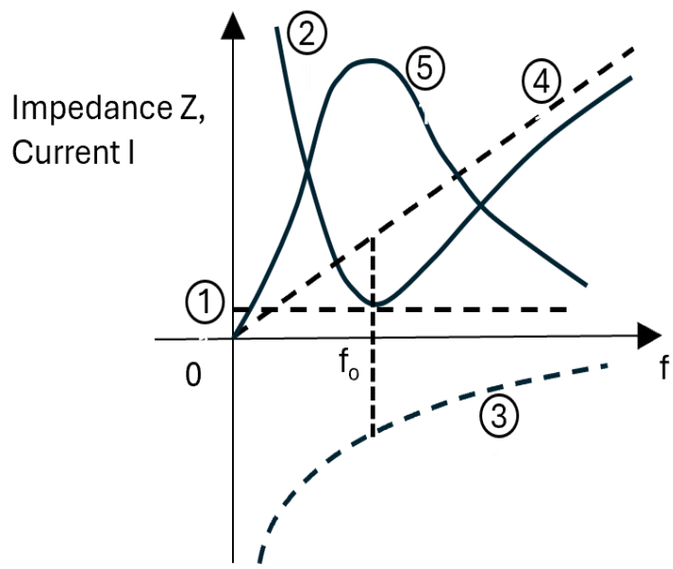

Ans

✗ A. 1 → R, 2 → |I|, 3 → XL, 4 → XC, 5 → |Z|

✗ B. 1 → XL, 2 → |I|, 3 → XC, 4 → |Z|, 5 → R

✓ C. 1 → R, 2 → |Z|, 3 → XC, 4 → XL, 5 → |I|

✗ D. 1 → |Z|, 2 → R, 3 → XC, 4 → XL , 5 → |I|

Question ID : **4410091287469**
Option 1 ID : **4410095081665**
Option 2 ID : **4410095081664**
Option 3 ID : **4410095081663**
Option 4 ID : **4410095081666**
Status : **Answered**
Chosen Option : **C**

Q.58 **Determine the DC current gain of the Common collector configuration in NPN BJT, if collector current is 0.98 mA and the base current is 0.02 mA.**

Ans

✗ A. 49

✓ B. 50

✗ C. 100

✗ D. 98

Question ID : **4410091506486**
Option 1 ID : **4410095950307**
Option 2 ID : **4410095950306**
Option 3 ID : **4410095950304**
Option 4 ID : **4410095950305**
Status : **Answered**
Chosen Option : **A**

Q.59 Which of the following statements is correct in the context of a semiconductor?

Ans

✗ A. Concentration of holes in the valence band is independent of the doping concentration in a p-type semiconductor.

✓ B. As the temperature increases, thermal energy excites more electrons from the valence band to the conduction band, leaving a higher concentration of holes behind.

✗ C. If a pure semiconductor is doped with donor impurities, then the material has a higher hole concentration.

✗ D. In a pure semiconductor, the concentration of holes is much greater than the concentration of electrons at thermal equilibrium.

Question ID : **4410091369479**
Option 1 ID : **4410095409364**
Option 2 ID : **4410095409363**
Option 3 ID : **4410095409365**
Option 4 ID : **4410095409362**
Status : **Answered**
Chosen Option : **B**

Q.60 Which of the following facts is true for energy band diagram of n-type semiconductor?

Ans

✗ A. The doped fermi level overlaps the intrinsic fermi level for rise in doping concentration.

✓ B. The doped fermi level moves closer to the conduction band for rise in doping concentration.

✗ C. The doped fermi level moves closer to the valence band for rise in doping concentration.

✗ D. The fermi level transition is independent of the doping concentration.

Question ID : **4410091369401**
Option 1 ID : **4410095409058**
Option 2 ID : **4410095409059**
Option 3 ID : **4410095409061**
Option 4 ID : **4410095409060**
Status : **Answered**
Chosen Option : **B**

Q.61 Which of the following statements related to the C-V (Capacitance-Voltage) characteristics of a MOS capacitor is correct?

Ans

✗ A. In accumulation, the capacitance is high and stable, but very much less than the oxide capacitance.

✗ B. In accumulation, the capacitance is low and unstable and it much higher than the oxide capacitance.

✗ C. In accumulation region, the capacitance is very low but stable and it is equal to the oxide capacitance.

✓ D. In accumulation, the capacitance is high and stable, equal to the oxide capacitance.

Question ID : **4410091369208**
Option 1 ID : **4410095408287**
Option 2 ID : **4410095408289**
Option 3 ID : **4410095408286**
Option 4 ID : **4410095408288**
Status : **Answered**
Chosen Option : **B**

Q.62 Which of the following parameters affects the delay time the most in a second-order underdamped system?

Ans

✔ A. Both natural frequency (ωn) and damping ratio (ζ)

✘ B. Damping ratio ζ only

✘ C. Input Amplitude

✘ D. Natural frequency ωn only

Question ID : **441009308830**
Option 1 ID : **4410091209055**
Option 2 ID : **4410091209053**
Option 3 ID : **4410091209054**
Option 4 ID : **4410091209052**
Status : **Answered**
Chosen Option : **A**

Q.63 Select the correct statement(s) for the antilog amplifier.

S1: The antilog amplifier uses the nonlinear behaviour of either diodes or transistors.
S2: The antilog amplifier output is temperature independent.
S3: The antilog amplifier is used in computation like multiplication and division.

Ans

✘ A. S1, S2 and S3

✘ B. Only S1 and S2

✘ C. Only S2 and S3

✔ D. Only S1 and S3

Question ID : **4410091507070**
Option 1 ID : **4410095952717**
Option 2 ID : **4410095952715**
Option 3 ID : **4410095952716**
Option 4 ID : **4410095952714**
Status : **Answered**
Chosen Option : **A**

Q.64 **For the system shown, determine the transfer function Y(s)/D(s). (Take R(s)=0.)**

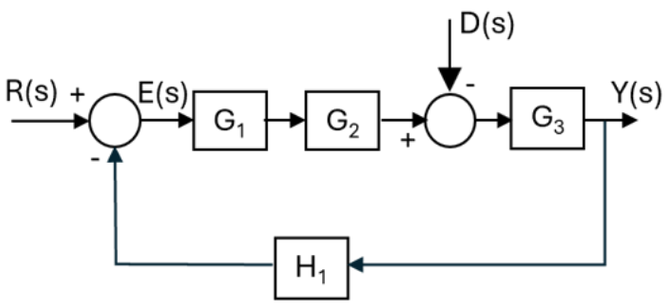

Ans

✗ A. $\dfrac{G_3(s)}{1 + G_1(s)G_2(s)G_3(s)H_1(s)}$

✗ B. $\dfrac{-G_3(s)}{1 - G_1(s)G_2(s)G_3(s)H_1(s)}$

✓ C. $\dfrac{-G_3(s)}{1 + G_1(s)G_2(s)G_3(s)H_1(s)}$

✗ D. $\dfrac{G_3(s)}{1 - G_1(s)G_2(s)G_3(s)H_1(s)}$

Question ID : **4410091454139**
Option 1 ID : **4410095744873**
Option 2 ID : **4410095744876**
Option 3 ID : **4410095744874**
Option 4 ID : **4410095744875**
Status : **Answered**
Chosen Option : **D**

Q.65 **A series RC circuit consists of a resistor R and a capacitor C connected in series. A unit-impulse voltage $v_{in}(t) = \delta(t)$ is applied across the circuit. The output is the capacitor voltage $v_c(t)$. The expression correctly representing $v_c(t)$ is _____.**

Ans

✗ A. vc(t) = e-t/RC u(t)

✗ B. vc(t)= (1/R) e-t/RC u(t)

✗ C. vc(t) = δ(t) - (1/RC) e-t/RC u(t)

✓ D. vc(t) = (1/RC) e-t/RC u(t)

Question ID : **4410091454223**
Option 1 ID : **4410095745197**
Option 2 ID : **4410095745199**
Option 3 ID : **4410095745200**
Option 4 ID : **4410095745198**
Status : **Answered**
Chosen Option : **C**

Q.66 Which of the following options is correct in the context of the practical diode model?

Ans

✔ A. It has fixed voltage drop when conducting.

✘ B. It has infinite resistance when forward biased.

✘ C. Equivalent circuit of the practical diode in the forward bias state consists of an open circuit only.

✘ D. Reverse current for the practical diode is zero.

Question ID : **4410091363848**
Option 1 ID : **4410095387318**
Option 2 ID : **4410095387320**
Option 3 ID : **4410095387321**
Option 4 ID : **4410095387319**
Status : **Answered**
Chosen Option : **A**

Q.67 In a CMOS inverter (NOT gate), what happens to the output when the input voltage is close to the threshold voltage of the NMOS transistor?

Ans

✔ A. Both NMOS and PMOS transistors may conduct, causing high current dissipation

✘ B. Output is guaranteed logic low

✘ C. Output becomes undetermined logic level with no current drawn

✘ D. Output is guaranteed logic high

Question ID : **4410091521352**
Option 1 ID : **4410096008523**
Option 2 ID : **4410096008521**
Option 3 ID : **4410096008522**
Option 4 ID : **4410096008520**
Status : **Answered**
Chosen Option : **A**

Q.68 Which antenna radiates through an open aperture formed by a flared waveguide?

Ans

✘ A. Small loop antenna

✘ B. Parabolic reflector

✘ C. Patch antenna

✔ D. Horn antenna

Question ID : **4410091524971**
Option 1 ID : **4410096023082**
Option 2 ID : **4410096023081**
Option 3 ID : **4410096023079**
Option 4 ID : **4410096023080**
Status : **Answered**
Chosen Option : **C**

Q.69 **Which of the given statements is correct in the context of the single side band amplitude modulation method or SSB modulation?**

S1: Coherent detection demodulation technique is used.
S2: If there is a local oscillator that is 10° out of phase from the required phase, then the output is not distorted.

Ans
- ✗ A. S2 only
- ✗ B. S1 and S2
- ✓ C. S1 only
- ✗ D. Neither S1 nor S2

Question ID : **4410091372196**
Option 1 ID : **4410095420199**
Option 2 ID : **4410095420200**
Option 3 ID : **4410095420198**
Option 4 ID : **4410095420201**
Status : **Answered**
Chosen Option : **A**

Q.70 **What is the Z- transform X(z) of the signal** $x(n) = 3\,x_1(n) - 2\,x_2(n)$**, where:**

$x_1(n) \xleftrightarrow{z} X_1(z)$

$x_2(n) \xleftrightarrow{z} X_2(z)$

Ans
- ✓ A. $X(z) = 3\,X_1(z) - 2\,X_2(z)$
- ✗ B. $X(z) = X_1(z) - X_2(z)$
- ✗ C. $X(z) = x_1(n) + x_2(n)$
- ✗ D. $X(z) = 3\,x_1(z) \times x_2(z)$

Question ID : **441009290264**
Option 1 ID : **4410091127984**
Option 2 ID : **4410091127983**
Option 3 ID : **4410091127985**
Option 4 ID : **4410091127986**
Status : **Answered**
Chosen Option : **A**

Q.71 **For a good conductor at f = 10 MHz, the attenuation constant is measured as: $\alpha = 5 \times 10^2$ Np/m.**
The permeability of the conductor is approximately that of free space ($\mu = \mu_0$). Estimate the skin depth (δ) and the phase velocity (v) of the wave in the conductor.

Ans
- ✗ A. δ = 0.2 mm, v = $\pi \times 104$ m/s.
- ✗ B. δ = 2 mm, v = $4\pi \times 106$ m/s.
- ✓ C. δ = 2 mm, v = $4\pi \times 104$ m/s.
- ✗ D. δ = 2 mm, v = $2\pi \times 104$ m/s.

Question ID : **4410091455650**
Option 1 ID : **4410095750922**
Option 2 ID : **4410095750919**
Option 3 ID : **4410095750920**
Option 4 ID : **4410095750921**
Status : **Answered**
Chosen Option : **B**

Q.72 **The characteristic equation of a system is given as $a_0s^3+a_1s^2+a_2s+a_3=0$, where coefficients a_0, a_1, a_2, and a_3 are real and positive numbers. By using the Routh-Hurwitz test, which of the following expressions is a necessary condition for the system to be stable?**

Ans
- ✗ A. a1a3>a0a2
- ✓ B. a1a2>a0a3
- ✗ C. a0a3>a1a2
- ✗ D. a0a1>a2a3

Question ID : **4410091169063**
Option 1 ID : **4410094610731**
Option 2 ID : **4410094610729**
Option 3 ID : **4410094610728**
Option 4 ID : **4410094610730**
Status : **Answered**
Chosen Option : **A**

Q.73 **Which of the following options is correct in the context of a two-way parallel clipper circuit?**

Ans
- ✗ A. The two diodes are connected in parallel but facing the same direction.
- ✓ B. The two diodes are connected in parallel but in the opposite direction.
- ✗ C. The two diodes are connected in series but in the opposite direction.
- ✗ D. The two diodes are connected in series with the load.

Question ID : **4410091363830**
Option 1 ID : **4410095387247**
Option 2 ID : **4410095387248**
Option 3 ID : **4410095387249**
Option 4 ID : **4410095387246**
Status : **Answered**
Chosen Option : **B**

Q.74 **Which of the following statements correctly describes the s-domain shifting property?**

Ans

✗ A. Multiplying the signal x(t) by a units in the time domain ↔ multiplying the signal X(s) by e-as.

✓ B. Multiplying the signal by eat in the time domain ↔ shifting in the s-domain X(s) to X(s - a)

✗ C. Multiplying the signal by e-at in the time domain ↔ shifting in the s-domain X(s) to X(s + 2a).

✗ D. Multiplying the signal by t.eat in the time domain ↔ shifting in the s-domain X(s) to X(s - at)

Question ID : **4410091385120**
Option 1 ID : **4410095471226**
Option 2 ID : **4410095471225**
Option 3 ID : **4410095471224**
Option 4 ID : **4410095471227**
Status : **Answered**
Chosen Option : **C**

Q.75 **A pair of magnetically coupled coils is wound on a nonmagnetic core. The self-inductance of coil 1 is L_1 = 200 mH. The mutual inductance is M = 80 mH, and the coefficient of coupling is k = 4/5. The partial self-permeances are equal, so $L \propto N^2$ with the same proportionality for both coils. Find the self-inductance L_2 of coil 2 and the turns ratio N_1/N_2.**

Ans

✗ A. L_2 = 200 mH, N_1/N_2 = 2

✗ B. L_2 = 12.5 mH, N_1/N_2 = 2

✗ C. L_2 = 50 mH, N_1/N_2 = 1/2

✓ D. L_2 = 50 mH, N_1/N_2 = 2

Question ID : **4410091525775**
Option 1 ID : **4410096026261**
Option 2 ID : **4410096026260**
Option 3 ID : **4410096026259**
Option 4 ID : **4410096026258**
Status : **Answered**
Chosen Option : **D**

Q.76 **A third-order LTI system has three distinct real poles at $p_1 = -0.8$, $p_2 = -4$ and $p_3 = -15$. A new system G′(s) is formed by adding a zero at s = −3 to the original transfer function (the pole locations remain unchanged). Which statement about the unit-step response of G′(s) (compared to the original system G(s)) is FALSE?**

Ans

✗ A. G′(s) will generally have a faster rise time than G(s).

✓ B. The zero at s = −3 will introduce an initial undershoot (inverse response) in the step output of G′(s).

✗ C. The dominant pole for both systems remains at s = −0.8.

✗ D. For a unit-step input, if both systems are adjusted to have unity DC gain, the final value of the response will be the same.

Question ID : **4410091454337**
Option 1 ID : **4410095745661**
Option 2 ID : **4410095745664**
Option 3 ID : **4410095745663**
Option 4 ID : **4410095745662**
Status : **Answered**
Chosen Option : **D**

Q.77 **In the CMOS implementation of a NOT gate, which of the following statements is true?**

Ans

✗ A. Both NMOS and PMOS transistors are ON in the steady state.

✓ B. When the input is HIGH, NMOS transistor is ON, and PMOS transistor is OFF.

✗ C. When the input is HIGH, PMOS transistor is ON, and NMOS transistor is OFF.

✗ D. When the input is LOW, NMOS transistor is ON, PMOS transistor is OFF.

Question ID : **4410091521131**
Option 1 ID : **4410096007702**
Option 2 ID : **4410096007705**
Option 3 ID : **4410096007703**
Option 4 ID : **4410096007704**
Status : **Answered**
Chosen Option : **C**

Q.78 **A unity negative feedback system has a closed-loop transfer function obtained from the block diagram as:**
T(s) = C/R = 5/6.
A student converts the system into a signal-flow graph (SFG) but forgets to include the feedback branch. Using the incomplete SFG, the student computes C/R. From this information, determine the ratio of the incorrect SFG result to the correct block-diagram result.

Ans

✓ A. 6

✗ B. 1/6

✗ C. 11/6

✗ D. 5/6

Question ID : **4410091524785**
Option 1 ID : **4410096022347**
Option 2 ID : **4410096022348**
Option 3 ID : **4410096022350**
Option 4 ID : **4410096022349**
Status : **Answered**
Chosen Option : **B**

Q.79 **When designing a traffic light controller using a Mealy finite state machine, which has three states: S0 (Green), S1 (Yellow), and S2 (Red), the controller utilises a vehicle sensor input X (where 1 indicates a vehicle is present and 0 means no vehicle). Then the output Y = 1 occurs only when _____.**

Ans

✔ A. the machine is in state S1 or S2, and the sensor input X = 1

✘ B. the machine is in state S1 and S2, and the sensor input X = 0

✘ C. the machine is in state S1 or S2 and the sensor input X = 0

✘ D. the machine is in state S1 and the sensor input X = 1

Question ID : **4410091536561**
Option 1 ID : **4410096069436**
Option 2 ID : **4410096069437**
Option 3 ID : **4410096069438**
Option 4 ID : **4410096069439**
Status : **Answered**
Chosen Option : **B**

Q.80 **When a control system is represented as a Block Diagram (BD) or a Signal Flow Graph (SFG), both can show feedback and signal paths. Which statement is always true about the relation between these two forms?**

Ans

✘ A. If two Block Diagrams give the same transfer function, their Signal Flow Graphs will also have identical sets of loops and non-touching loop pairs.

✔ B. If a Block Diagram has no feedback loops, then its Signal Flow Graph will also have no loops, and Δ = 1 in Mason's formula.

✘ C. Moving a signal pickoff point across a block never changes the loop structure, so the SFG is always the same.

✘ D. If a Block Diagram contains an instantaneous feedback (called an algebraic loop), then the equivalent Signal Flow Graph must have at least one closed loop, and the system will give a valid transfer function only when Δ = 0.

Question ID : **4410091452223**
Option 1 ID : **4410095737303**
Option 2 ID : **4410095737300**
Option 3 ID : **4410095737302**
Option 4 ID : **4410095737301**
Status : **Answered**
Chosen Option : **D**

Q.81 **A common-emitter amplifier using the approximate h-model, has h_{fe}=200 and h_{ie}=2 k Ω. If the input AC voltage is 20 mV, then the base current, collector current and the input resistance are _____, respectively.**

Ans

✘ A. 10 μ A, 2m A and 100 KΩ

✘ B. 100 μ A, 20 m A and 2KΩ

✔ C. 10 μ A, 2m A and 2KΩ

✘ D. 10 m A, 20μ A and 1KΩ

Question ID : **4410091507089**
Option 1 ID : **4410095952793**
Option 2 ID : **4410095952791**
Option 3 ID : **4410095952790**
Option 4 ID : **4410095952792**
Status : **Answered**
Chosen Option : **A**

Q.82 **A circularly polarized plane wave is incident from air (ε_{r1} = 1) onto a lossless dielectric medium (ε_{r2} = 3). The media are nonmagnetic. The wave is incident at the Brewster angle θ_p. The Brewster angle and the resulting polarization of the reflected wave are _____.**

Ans

✗ A. θp = 30°, reflected wave remains circularly polarized

✗ B. θp = 45°, reflected wave becomes elliptically polarized

✓ C. θp = 60°, reflected wave becomes linearly polarized with E perpendicular to the plane of incidence

✗ D. θp = 60°, reflected wave becomes linearly polarized with E parallel to the plane of incidence

Question ID : **4410091525089**
Option 1 ID : **4410096023550**
Option 2 ID : **4410096023551**
Option 3 ID : **4410096023553**
Option 4 ID : **4410096023552**
Status : **Answered**
Chosen Option : **C**

Q.83 **The transfer function of a system is given below.**

$$\frac{5s^2+3s+1}{s^3+6s^2+11s+6}$$

Which of the following is the order of this system?

Ans

✗ A. Second order

✗ B. Fourth order

✗ C. First order

✓ D. Third order

Question ID : **4410091169141**
Option 1 ID : **4410094611033**
Option 2 ID : **4410094611035**
Option 3 ID : **4410094611032**
Option 4 ID : **4410094611034**
Status : **Answered**
Chosen Option : **B**

Q.84 **A hollow conducting sphere has inner radius a and outer radius b. A point charge +q is fixed at the center of the cavity. The conductor is initially neutral and in electrostatic equilibrium. Consider a concentric closed surface S of radius r with a < r < b (i.e., entirely within the conducting material). The value of $\oint_S E \cdot dS$ is _____ .**

Ans

✗ A. $(2q / \varepsilon_0)$

✗ B. $(-q / \varepsilon_0)$

✗ C. (q / ε_0)

✓ D. 0

Question ID : **4410091455518**
Option 1 ID : **4410095750394**
Option 2 ID : **4410095750393**
Option 3 ID : **4410095750392**
Option 4 ID : **4410095750391**
Status : **Answered**
Chosen Option : **C**

Q.85 **A CMOS inverter fabricated in a 0.18 μm process for which V_{DD} =1.8 V, magnitude of threshold voltage = 0.5 V, $\mu_n = 4\ \mu_p$, $\mu_n C_{ox}$ = 300 μA/V^2 and Q_N and**
Q_p have L_p= 18 μm
$(W/L)_n$ = 1.5,
then the value of width Wp is _____.

Ans

✗ A. 4.32 μm

✗ B. 0.27 μm

✓ C. 108 μm

✗ D. 0.54 μm

Question ID : **4410091380189**
Option 1 ID : **4410095451968**
Option 2 ID : **4410095451967**
Option 3 ID : **4410095451966**
Option 4 ID : **4410095451969**
Status : **Answered**
Chosen Option : **C**

Q.86 **Determine the small-signal AC voltage gain of a BJT common-emitter (CE) amplifier with a fully bypassed emitter resistor if the transconductance is 100 mS and the collector resistor and the load resistor are 2 KΩ each. What is the output voltage if the input voltage is Vin = 10sin(100πt) mV.**

Ans

✗ A. Voltage gain = -100, Vo = -10sin(100πt).

✗ B. Voltage gain = +10, Vo = sin(100πt).

✗ C. Voltage gain = +10, Vo = 10 sin(100πt).

✓ D. Voltage gain = -100, Vo = -sin(100πt).

Question ID : **4410091369202**
Option 1 ID : **4410095408264**
Option 2 ID : **4410095408262**
Option 3 ID : **4410095408265**
Option 4 ID : **4410095408263**
Status : **Answered**
Chosen Option : **B**

Q.87 **If analog filter is stable, then which of the following methods guarantees stability of an IIR filter?**

Ans

✗ A. Impulse invariance method

✗ B. Fourier series truncation

✓ C. Bilinear transform method

✗ D. Frequency sampling method

Question ID : **4410091409891**
Option 1 ID : **4410095568467**
Option 2 ID : **4410095568470**
Option 3 ID : **4410095568468**
Option 4 ID : **4410095568469**
Status : **Answered**
Chosen Option : **D**

Q.88 **Choose the correct statement for a negative clamper circuit.**

S1: A clamper circuit is used to add an AC voltage to its input signal.
S2: A negative DC can be added to the input signal in case of a negative clamper circuit.
S3: This circuit uses only diode and resister.

Ans

✗ A. S1 and S3 only

✓ B. S1 and S2 only

✗ C. S2 and S3 only

✗ D. S1, S2 and S2

Question ID : **4410091509995**
Option 1 ID : **4410095964661**
Option 2 ID : **4410095964660**
Option 3 ID : **4410095964662**
Option 4 ID : **4410095964663**
Status : **Answered**
Chosen Option : **D**

Q.89 **A rectangular waveguide of internal width a = 3 cm carries the dominant TE_{10} mode of a signal at unknown frequency. The characteristic wave impedance in the guide is Z = 240π Ω. Take free-space impedance Z_0 = 120π Ω and c = 3×10^8 m/s. Find the operating frequency f.**

Ans

✗ A. (5/√3) GHz

✓ B. (10/√3) GHz

✗ C. (5√3/2) GHz

✗ D. (10/3) GHz

Question ID : **4410091456118**
Option 1 ID : **4410095752822**
Option 2 ID : **4410095752823**
Option 3 ID : **4410095752825**
Option 4 ID : **4410095752824**
Status : **Answered**
Chosen Option : **B**

Q.90 **A series R–C circuit consists of a resistor R and a capacitor C connected in series. The input is a delayed unit impulse voltage**
$v_{in}(t) = \delta(t - T)$, T > 0.
The output is the capacitor voltage $v_C(t)$. Which expression correctly represents $v_C(t)$?

Ans

✗ A. vC(t) = e−t/RC u(t)

✗ B. vC(t)= δ(t−T) − (1/RC) e−(t-T) / RC u(t−T)

✗ C. vC(t) = (1/RC) e−(t-T) / RC u(t)

✓ D. vC(t) = (1/RC) e−(t-T) / RC u(t−T)

Question ID : **4410091524943**
Option 1 ID : **4410096022971**
Option 2 ID : **4410096022974**
Option 3 ID : **4410096022972**
Option 4 ID : **4410096022973**
Status : **Answered**
Chosen Option : **A**

Q.91 **If frequency modulated signal has message bandwidth of 05 KHz and maximum frequency deviation of 75KHz, the value of modulation index β and bandwidth of the tone FM signal are _____, respectively**

Ans

✓ A. 15 and 160 KHz

✗ B. 7.75 and 160 KHz

✗ C. 7.75 and 80 KHz

✗ D. 15 and 80 MHz

Question ID : **4410091511950**
Option 1 ID : **4410095971885**
Option 2 ID : **4410095971887**
Option 3 ID : **4410095971888**
Option 4 ID : **4410095971886**
Status : **Answered**
Chosen Option : **C**

Q.92 **An EM wave of frequency f propagates in a non-magnetic medium ($\mu_r = 1$). The medium parameters are chosen such that $\sigma = \omega\varepsilon$ (that is, $\sigma/(\omega\varepsilon) = 1$), where $\omega = 2\pi f$ and $\varepsilon = \varepsilon_0\, \varepsilon_r$. What is the phase difference between the electric field E and the magnetic field H? (Assume the usual phasor convention.)**

Ans
- ✔ A. 22.5°
- ✘ B. 45°
- ✘ C. 90°
- ✘ D. 0°

Question ID : **4410091455610**
Option 1 ID : **4410095750760**
Option 2 ID : **4410095750761**
Option 3 ID : **4410095750762**
Option 4 ID : **4410095750759**
Status : **Answered**
Chosen Option : **B**

Q.93 **Study the given circuit carefully and answer the question that follows.**

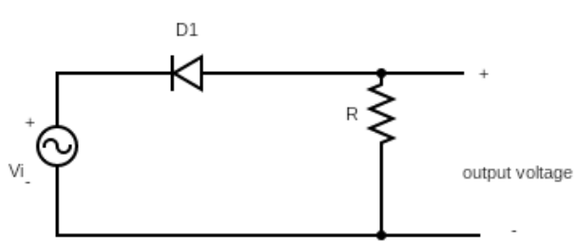

Which of the given statements are correct for the above circuit?

S1: **It is a series positive clipper circuit.**
S2: **For the positive input voltage, output is clipped off.**
S3: **Output will be negative when the diode is forward biased.**

Ans
- ✘ A. S2 and S3 only
- ✘ B. S1 and S3 only
- ✔ C. S1, S2 and S3
- ✘ D. S1 and S2 only

Question ID : **4410091367456**
Option 1 ID : **4410095401272**
Option 2 ID : **4410095401270**
Option 3 ID : **4410095401269**
Option 4 ID : **4410095401271**
Status : **Answered**
Chosen Option : **B**

Q.94 **The transfer function of the discrete-time system H(z) has poles at z = 0.5 and z = 1.5. Which ROC corresponds to the stable and non-causal system?**

Ans

✗ A. |z| = 1

✗ B. |z| > 1.5

✓ C. 0.5 < |z| < 1.5

✗ D. |z| < 0.5

Question ID : **4410091408666**
Option 1 ID : **4410095563628**
Option 2 ID : **4410095563626**
Option 3 ID : **4410095563627**
Option 4 ID : **4410095563625**
Status : **Answered**
Chosen Option : **D**

Q.95 **Five equal resistors, each of resistance R, are connected to form a square, with one diagonal placed between opposite corners. Find the equivalent resistance between two adjacent nodes of the square.**

Ans

✗ A. R/2

✗ B. 4R/5

✗ C. 3R/4

✓ D. 5R/8

Question ID : **4410091525767**
Option 1 ID : **4410096026228**
Option 2 ID : **4410096026229**
Option 3 ID : **4410096026226**
Option 4 ID : **4410096026227**
Status : **Answered**
Chosen Option : **A**

Q.96 **The minimum number of check bits in a single error correcting hamming code if the number of message bits in a block is 27 is _____.**

Ans

✓ A. 6

✗ B. 5

✗ C. 8

✗ D. 4

Question ID : **4410091377164**
Option 1 ID : **4410095440211**
Option 2 ID : **4410095440212**
Option 3 ID : **4410095440214**
Option 4 ID : **4410095440213**
Status : **Answered**
Chosen Option : **D**

Q.97 **A rectangular pulse x(t) of width T has Fourier transform X(f) = T sinc(f.T). The main-lobe bandwidth (null-to-null) is:**

Ans
- ✔ A. 2 / T
- ✘ B. T
- ✘ C. 1 / T
- ✘ D. 1 / (2T)

Question ID : **4410091408216**
Option 1 ID : **4410095561831**
Option 2 ID : **4410095561832**
Option 3 ID : **4410095561829**
Option 4 ID : **4410095561830**
Status : **Answered**
Chosen Option : **B**

Q.98 **A pair of magnetically coupled coils is wound on a nonmagnetic form. The self-inductance of coil 1 is L_1 = 162 mH, the mutual inductance is M = 81 mH, and the coefficient of coupling is k = 0.75. The physical arrangement is such that the partial self-permeances are equal. Find L_2 and the turns ratio N_1/N_2.**

Ans
- ✘ A. L_2 = 288 mH, N_1/N_2 = 1/2
- ✘ B. L_2 = 18 mH, N_1/N_2 = 3/2
- ✔ C. L_2 = 72 mH, N_1/N_2 = 3/2
- ✘ D. L_2 = 72 mH, N_1/N_2 = 2/3

Question ID : **4410091497920**
Option 1 ID : **4410095916703**
Option 2 ID : **4410095916702**
Option 3 ID : **4410095916700**
Option 4 ID : **4410095916701**
Status : **Answered**
Chosen Option : **A**

Q.99 **Design a pure parallel RLC resonant circuit having the following parameters:**
- **k = 2000 Ω (equivalent parallel resistance)**
- **Q = 10 (quality factor)**
- **ω_0 = 5000 rad/s (resonant angular frequency)**

Determine the values of the inductance L and capacitance C of the circuit.

Ans
- ✘ A. L = 20 mH, C = 1 μF
- ✘ B. L = 80 mH, C = 0.5 μF
- ✔ C. L = 40 mH, C = 1 μF
- ✘ D. L = 10 mH, C = 4 μF

Question ID : **4410091498032**
Option 1 ID : **4410095917189**
Option 2 ID : **4410095917191**
Option 3 ID : **4410095917188**
Option 4 ID : **4410095917190**
Status : **Answered**
Chosen Option : **B**

Q.100 Which of the following 8085 instructions uses indirect addressing mode?

Ans

✗ A. LXI H, 2310H

✗ B. MVI A, 32H

✗ C. ADD B

✓ D. MOV A, M

Question ID : **4410091521969**
Option 1 ID : **4410096011010**
Option 2 ID : **4410096011012**
Option 3 ID : **4410096011013**
Option 4 ID : **4410096011011**
Status : **Answered**
Chosen Option : **A**

"